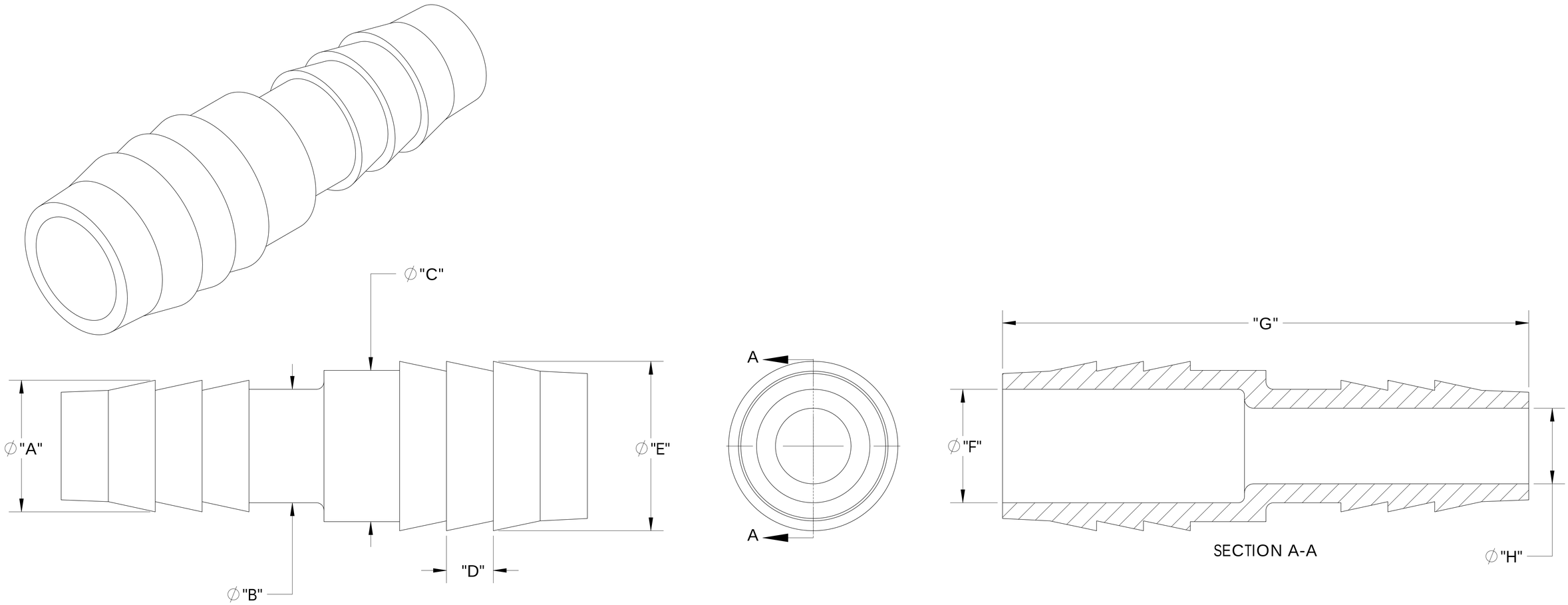

	CATALOG NO.	DESCRIPTION	MATERIAL	DIM "A"	DIM "B"	DIM "C"	DIM "D"	DIM "E"	DIM "F"	DIM "G"	DIM "H"
	TRC-8086-PP	1/2" X 3/8" PP	POLYPROPYLENE	.430	.365	.485	.155	.545	.370	1.72	.245
	TRC-8086-P	1/2" X 3/8" P	POLYETHYLENE	.430	.370	.490	.150	.545	.360	1.70	.245
SHOWN	TRC-8086-N	1/2" X 3/8" N	NYLON	.435	.375	.500	.155	.560	.375	1.74	.250
	TRC-8086-K	1/2" X 3/8" K	KYNAR	.425	.365	.490	.155	.550	.365	1.71	.245

NOTES:

1) POLYPROPYLENE HAS COLOR OPTIONS:
   BLACK = TRC-8086 PPB
   NATURAL = TRC-8086 PPN

PROPRIETARY AND CONFIDENTIAL

THE INFORMATION CONTAINED IN THIS DRAWING IS THE SOLE PROPERTY OF THOGUS PRODUCTS COMPANY. ANY REPRODUCTION IN PART OR AS A WHOLE WITHOUT THE WRITTEN PERMISSION OF THOGUS PRODUCTS COMPANY IS PROHIBITED.

REV	WRO#	DESCRIPTION
D	95.00138	CONVERTED TO 3D FORMAT

HISTORY

UNLESS OTHERWISE SPECIFIED:
DIMENSIONS ARE IN INCHES
TOLERANCES:
ANGULAR: ±0.5°
X.X = ± 0.1
X.XX = ± 0.05
X.XXX = ± 0.015
REMOVE ALL SHARP EDGES AND BURRS
BLEND ALL RADII TO 0.01IN
INTERPRET GEOMETRIC TOLERANCING PER: ANSI Y 14.5 1994
MATERIAL: PP, P, N, K
FINISH: NA
THIRD ANGLE PROJECTION:

	NAME	DATE
DRAWN	JRM	05/26/11
CHECKED	KDJ	5/26/2011
ENG APPR.		XX/XX/XX
MFG APPR.		XX/XX/XX
Q.A.		XX/XX/XX

COMMENTS:

DO NOT SCALE DRAWING

Thogus — You think it, we can make it...
33490 PIN OAK, AVON LAKE, OH 44012

TITLE:
1/2" BARB X 3/8" BARB REDUCER CONNECTOR

SIZE: B | DWG. NO.: TRC-8086 | REV: D

SCALE: 3:1 | MASS: | SHEET 1 OF 1